# Example 1

- **Assumptions**

1. Interconnect Delays not considered
2. Clock Uncertainty not considered
3. One Operating Condition

- **Required**

1. Is this path timing is met or not?

2. if met calculate the positive slack and if not calculate the negative slack

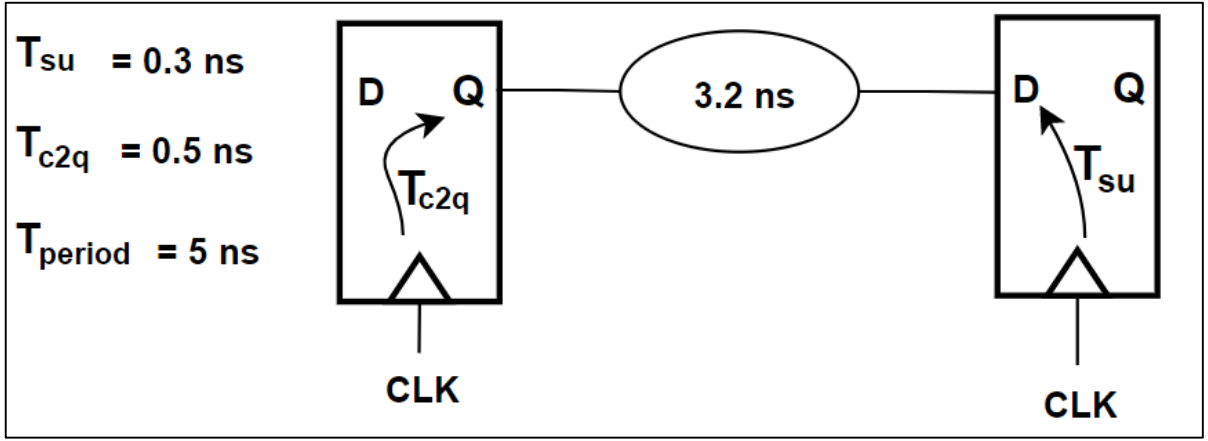


© 2021 Eng. Ali Mohamed

# Example 2

- **Assumptions**

1. **Interconnect Delays is considered**
2. Clock Uncertainty not considered
3. One Operating Condition

**Required: -**

1. Calculate Tpd1
2. Calculate Tpd2
3. Calculate the Minimum period (Max Frequency) to avoid setup violation for all paths

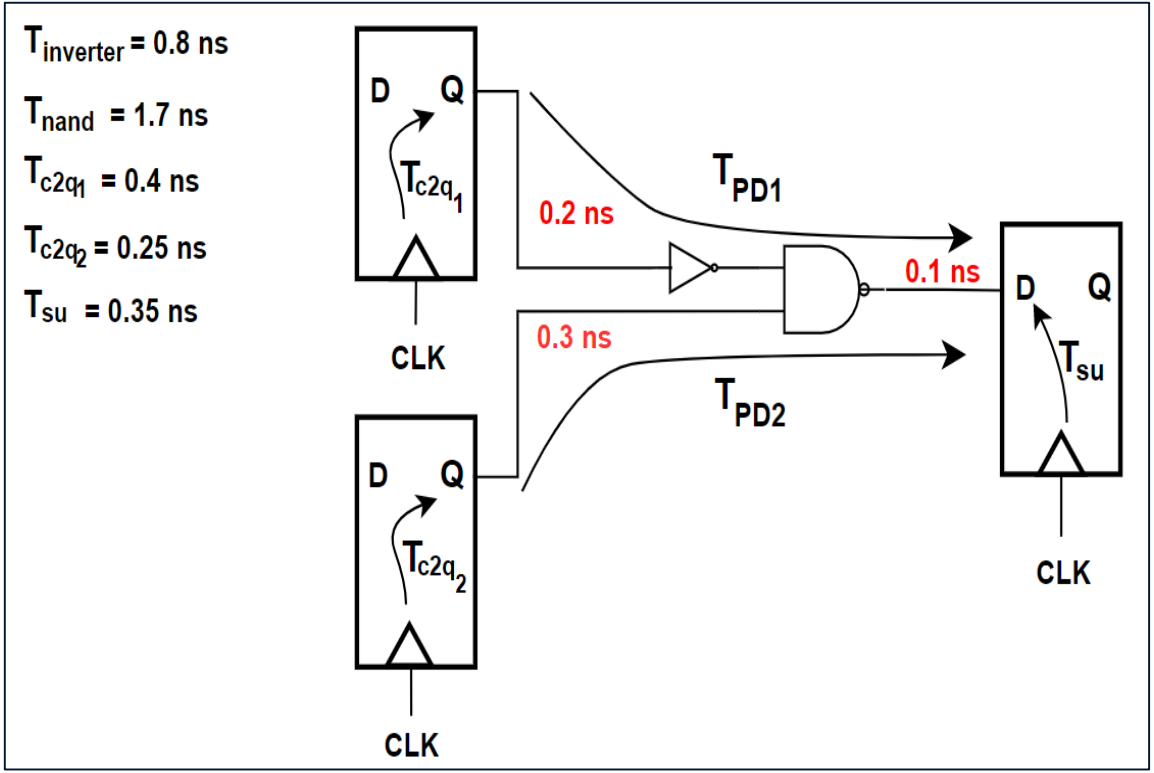


© 2021 Eng. Ali Mohamed

# Example 3

- **Assumptions**

1. **Interconnect Delays is considered**
2. **Clock Uncertainty is considered**
3. One Operating Condition

**Required: -**

1. Calculate Tpd1
2. Calculate Tpd2
3. Calculate the Minimum period (Max Frequency) to avoid setup violation for all paths

$T_{inverter}$ = 0.8 ns

$T_{nand}$ = 1.7 ns

$T_{c2q_1}$ = 0.4 ns

$T_{c2q_2}$ = 0.25 ns

$T_{su}$ = 0.35 ns

**Skew**

CLK 1_3 = 0.4 ns

CLK 2_3 = 0.1 ns

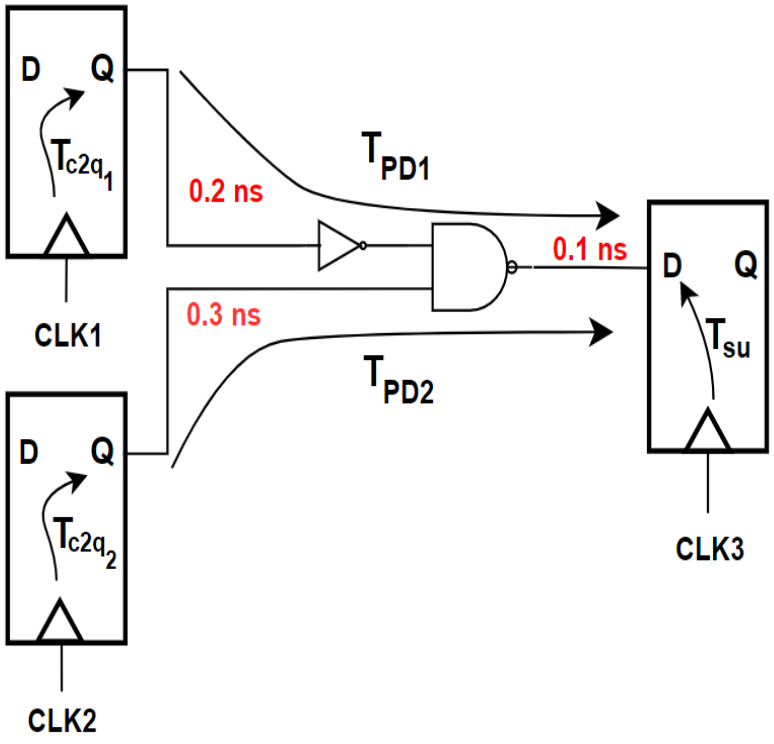


© 2021 Eng. Ali Mohamed

# Example 4

- **Assumptions**

1. Interconnect Delays is not considered
2. Clock Uncertainty is not considered
3. **Worst/Best Operating Conditions**

**Required: -**

1. Calculate Tpd1
2. Calculate Tpd2
3. Calculate the Minimum period (Max Frequency) to avoid setup violation for all paths

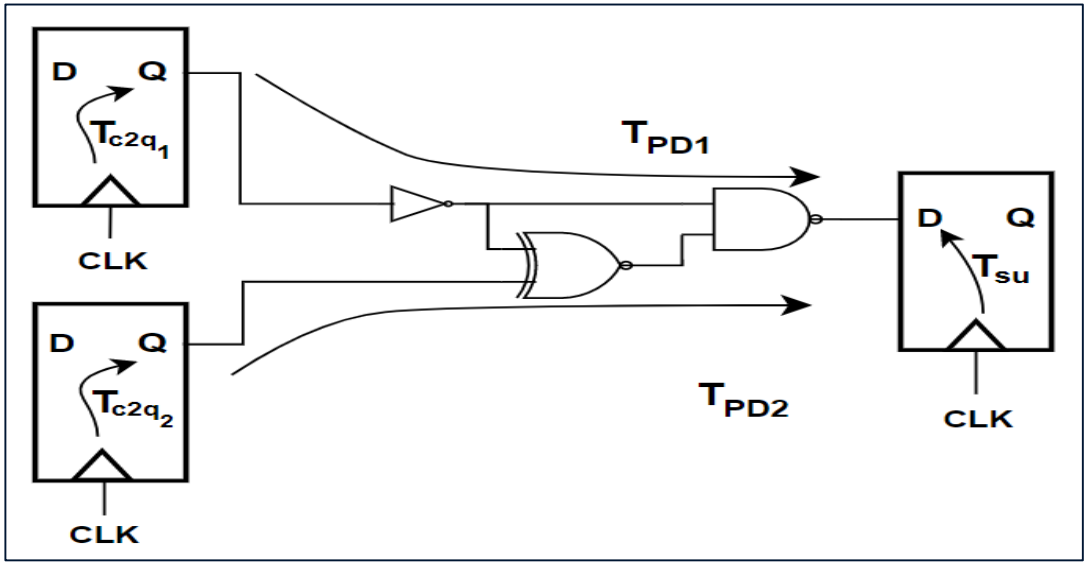


| Delays | Inverter | NOR | NAND | Tcq1 | Tcq2 | Tsu |
|---|---|---|---|---|---|---|
| Max | 0.8 | 1.7 | 1.2 | 0.4 | 0.25 | 0.3 |
| Min | 0.65 | 1.55 | 1.1 | 0.3 | 0.2 | 0.2 |

© 2021 Eng. Ali Mohamed